ORIGINAL

REV	DESCRIPTION		DATE	BY	CKD
	RELEASE TO PRODUCTION	(CRR0175)	06-05-02	D.M.	DN
A	REVISED CATALOG CODE	(CRR0204)	11-27-02	GRJ	

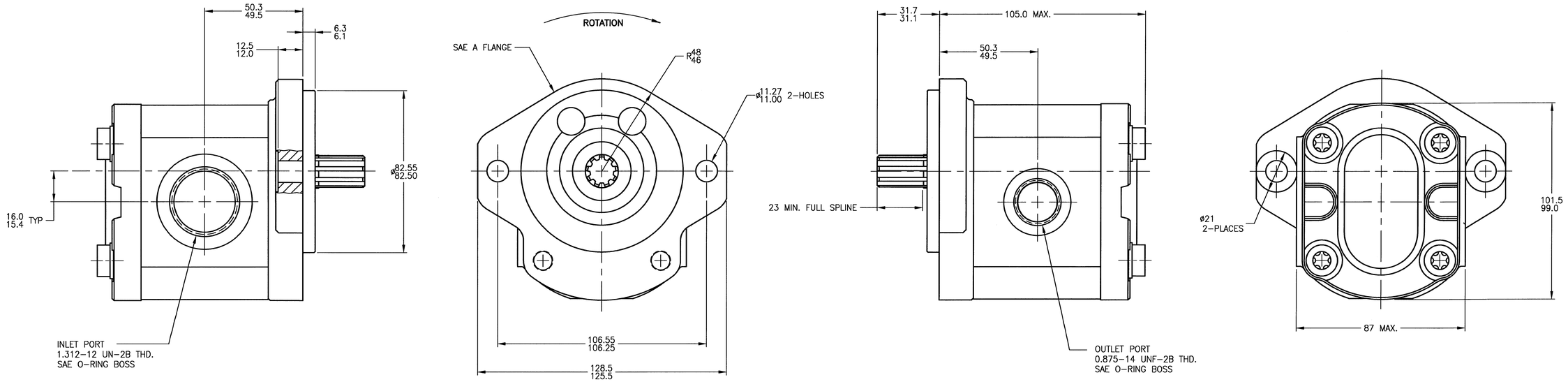

EXTERNAL INVOLUTE SPLINE DATA 7

FLAT ROOT SIDE FIT

FLAT ROOT SIDE FIT	
NO. OF TEETH	9
SPLINE PITCH	16/32
PRESSURE ANGLE	30°
PITCH DIA.	.56250 REF.
MAJOR DIA.	.6034-.6085
FORM DIA.	.504
CIRCULAR TOOTH THICKNESS:	
MAX.EFFECTIVE	.0942
MIN. ACTUAL	.0916

GENERAL NOTES:

1. METRIC LINEAR MEASUREMENTS ARE IN MILLIMETERS
2. ROTATION VIEWING DRIVE END: CLOCKWISE
3. DISPLACEMENT: 16.5 CC/REV
4. MAX CONTINUOUS RATED PRESSURE: 210 BAR
5. OUTPUT FLOW: 31.0 L/MIN. AT 2000 RPM & MAX. RATED PRESSURE USING SAE NO. 10 OIL AT 48°C
6. MAX RATED SPEED: 3500 RPM
7. EXTERNAL INVOLUTE SPLINE DATA IN DECIMAL INCHES

9 510 290 056

DO NOT SCALE
UNLESS OTHERWISE SPECIFIED: TOLERANCES PER DIN 7168m

LINEAR DIMENSION	TOL.
0– 6=	±0.1
6– 30=	±0.2
30– 120=	±0.3
120– 400=	±0.5
400–1000=	±0.8
ANGLES =	± 1°

METRIC

THIRD ANGLE PROJECTION

DRN D.M. DATE 06-05-02
CKD DN DATE 07-19-02
APPVD DATE
REF 9510290015TAB
CAD-ORIGINAL
Revisions thru CAD Only

DESCRIPTION AZ-P-F-12-016-RRR12MB (A)
TITLE PUMP-GEAR, INSTALLATION
DWG. NO. 9 510 290 056
REV. A
MATERIAL
SCALE FULL
SHEET 1 OF 1

ALL PROPRIETARY RIGHTS IN THE SUBJECT MATTER HEREOF ARE RESERVED, AND NO PERMISSION IS GRANTED TO REPRODUCE THIS PRINT IN WHOLE OR PART, OR TO DISCLOSE ANY OF THE INFORMATION UPON IT TO OTHERS.

D

Rexroth
Bosch Group
WOOSTER, OHIO 44691